WOODWORKER'S JOURNAL

"America's leading woodworking authority"™

Classic Project

In this plan you'll find:

- Step-by-step construction instruction.
- A complete bill of materials.
- Construction drawings and related photos.
- Tips to help you complete the project and become a better woodworker.

Two Deck Railing Planters

GIFT SHOP

2 Deck Railing Planters

44 The Woodworker's Journal

Published in *Woodworker's Journal* March/April 1992

To download these plans, you will need **Adobe Reader** installed on your computer. If you want to get a free copy, visit: **http://adobe.com/reader**.

Having trouble downloading the plans?
Right click on the download link and select "Save Target As..." or "Save Link As..." (depending on the web browser you are using) to download to your local drive.

Copyright *Woodworker's Journal* © 2011
This pattern is copyrighted by *Woodworker's Journal*. Purchasers of this plan may make three copies for personal use in the shop. The pattern itself, however, is the property of *Woodworker's Journal* and is not to be reproduced for distribution or resale. Doing so, including via any electronic methods, is a violation of copyright law.

$1.00
WJC106

2 Deck Railing Planters

© 2011 Woodworker's Journal

Plants can really spice up a deck, but locating decorative plants on the deck floor is usually not a good idea. They're forever in the way or in danger of being knocked over. The ideal solution to this problem is to locate the plants in railing-mounted planters. We've seen variations of these clever railing-mounted planter boxes in the garden shops, but if you've got a table saw, it's cheaper to make them yourself.

We show two styles of planters: a straight version and a corner version. Both have similar construction, mainly utilizing 3/4 in. square strips of cedar. Other rot-resistant woods, such as redwood or teak, are also fine for this type of project.

The illustrations show the planters built for mounting on a standard two-by-six deck railing, which measures about 5 1/2 in. wide. As shown, we've allowed an extra 1/4 in. so the planter fits easily over the railing. The detail shows how to dimension the planter base if your railing is two-by-four instead of two-by-six. However, there are nearly as many deck railing styles as there are decks, so

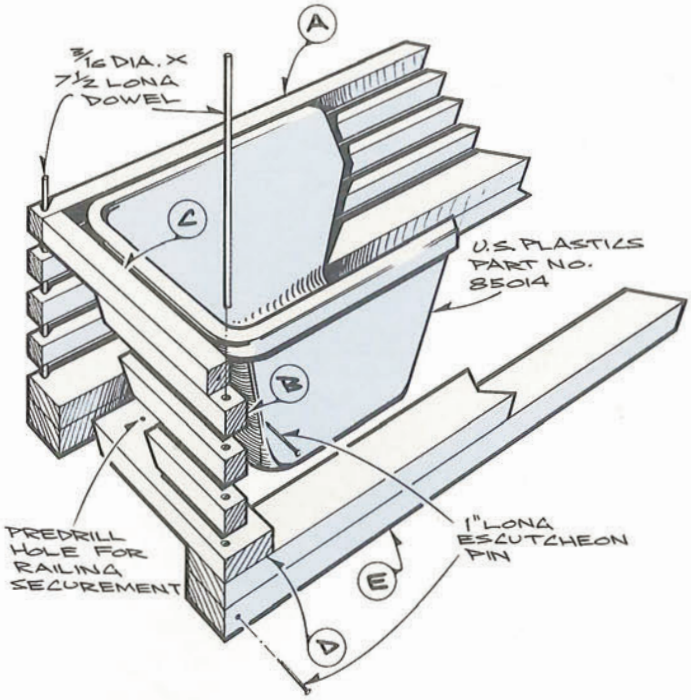

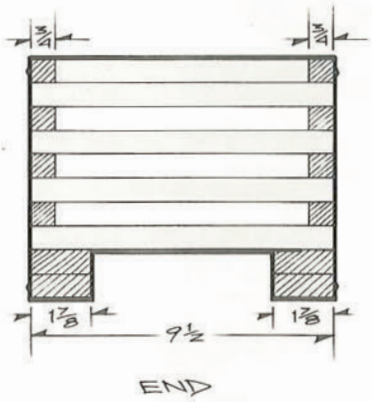

Bill of Materials
(all dimensions actual)

Part	Description	Size	No. Req'd.
	Straight Planter Box		
A	Side	3/4 x 3/4 x 32 1/2	8
B	End	3/4 x 3/4 x 9 1/2	6
C	End Filler	3/4 x 3/4 x 8	2
D	Base End	3/4 x 1 7/8 x 9 1/2	2
E	Base	3/4 x 1 7/8 x 32 1/2	4

OPTION FOR 2 X 4 RAILING

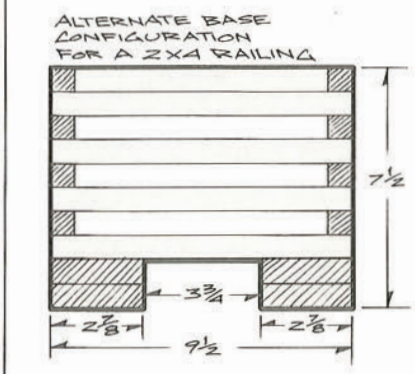

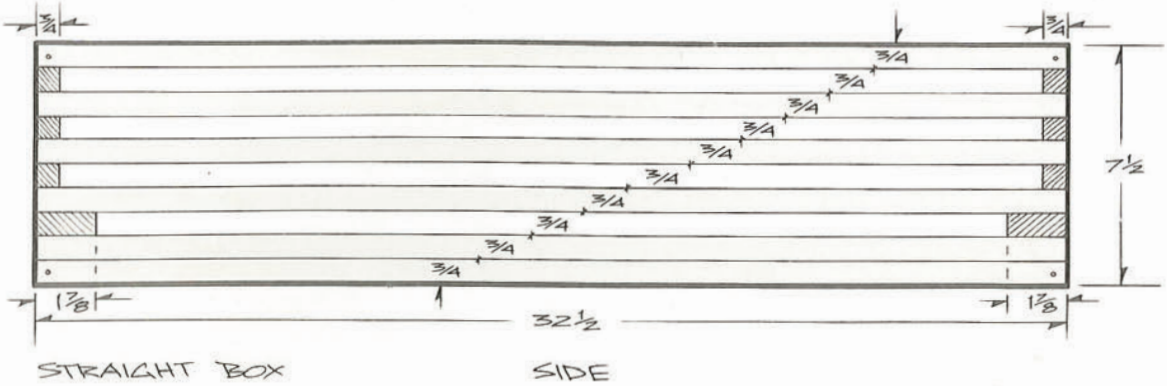

© 2011 Woodworker's Journal

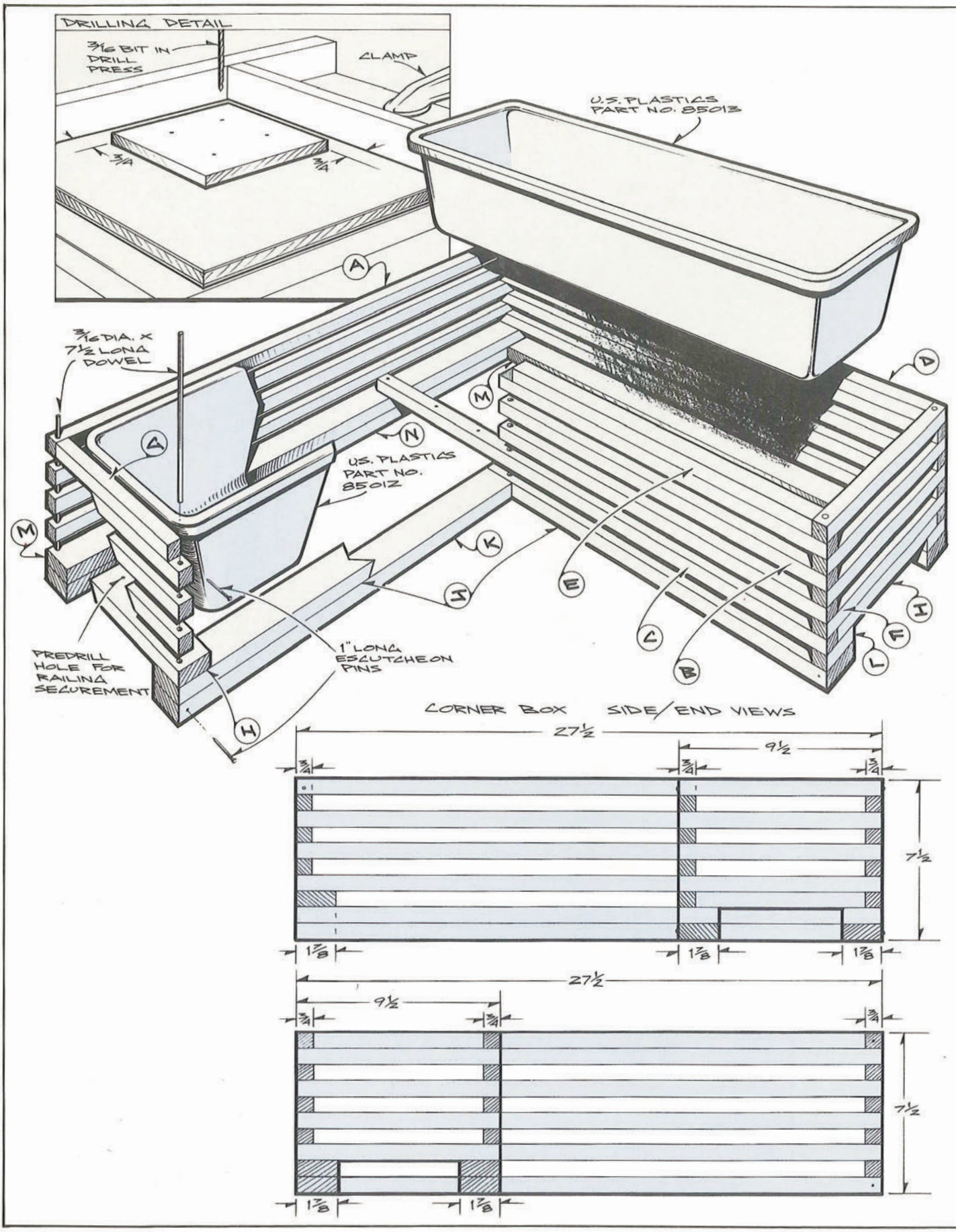

 © 2011 Woodworker's Journal

you may need to configure the planter bases to suit your particular situation. Just keep in mind that on the corner planter, any variation in the width of the base parts will mean a corresponding adjustment in the length of many of the base parts. If you'd rather not fuss with adding and subtracting to get the base to fit properly, just cut several scrap pieces to equal the width of your deck railing. Temporarily tack the scrap in place on the bottom of the planter boxes, then cut the base pieces to fit, allowing sufficient clearance on either side so the fit won't be too tight.

To help simplify building the planters, we've provided two separate Bills of Materials. However, the basic construction of both the straight and corner versions is similar. Note that our planters are sized to house the planter trays that we used (see Source for ordering information). These trays are a heavy-duty fiberglass reinforced molded plastic. They are a rigid tray, built to last, and not at all like the thin, easily crushed plastic trays that hothouse plants are often sold in. These heavy duty trays are meant to be planted in, though you could also place standard clay pots inside them. You will need to drill drainage holes in the tray bottoms, if you do plant in them.

Bill of Materials
(all dimensions actual)

Part	Description	Size	No. Req'd.
	Corner Planter Box		
A	Long Side	3/4 x 3/4 x 27 1/2	8
B	Short Side	3/4 x 3/4 x 18 3/4	7
C	Cross Strip	3/4 x 3/4 x 26 3/4	1
D	Long Filler	3/4 x 3/4 x 26	1
E	Short Filler	3/4 x 3/4 x 17 1/4	1
F	End	3/4 x 3/4 x 9 1/2	7
G	End Filler	3/4 x 3/4 x 8	1
H	Base End	3/4 x 1 7/8 x 9 1/2	1
I	Base End Filler	3/4 x 1 7/8 x 8	1
J	Short Base	3/4 x 1 7/8 x 19 7/8	2
K	Short Base Filler	3/4 x 1 7/8 x 18	1
L	Spacer Block	3/4 x 3/4 x 1 7/8	2
M	Long Base	3/4 x 1 7/8 x 27 1/2	2
N	Long Base Filler	3/4 x 1 7/8 x 25 5/8	1

Both the straight and the corner planters are constructed with just two basic sizes of stock: 3/4 in. square pieces that form the sides and ends, and 3/4 in. thick by 1 7/8 in. wide pieces that form the base sections. Cut the parts to the lengths listed in the Bills of Materials, then assemble as shown, using 3/16 in. diameter dowel pins at each corner. A simple drill press jig (see Drilling Detail) will insure that all the dowel pin holes in the 3/4 in. square strips align properly. For the holes in the base parts, by rubbing a little builder's chalk on the dowel pin ends, and then holding the base parts in position, you'll be able to accurately mark out the various holes in the base parts. No glue is used, but brass escutcheon pins through the dowel pins both top and bottom insure that they won't accidentally slip out. Use galvanized finishing nails to further secure the center area of the base sections that are doubled up, and to fasten the various filler pieces.

Although the construction of the straight planter is identical on both sides, the corner planter is a little fussier. The strips on the outside of the L are longer than the strips on the inside of the L. And, since trays aren't made with mitered ends, one tray had to be longer than the other. Like the straight planter, the base on the shorter tray side is doubled, but on the other leg of the L, a pair of short 3/4 in. square blocks serve as spacers. This avoids having three solid layers stacked one above the other. Finally, to lend the L shape some stability against racking, one of the strips—called a cross strip—on the inside of the L is longer than the rest, and ties into the base with a galvanized finishing nail, as shown in the exploded view.

Although, once fastened, the cross strip lends the corner planter much needed stability, you'll want to be absolutely certain that the planter is square when this strip is fastened down. Using a carpenter's square, lay out two pieces of scrap to form a right angle on your assembly surface, then tack the scrap pieces down temporarily. This simple jig can also be an assembly aid as you lay out and stack the pieces for the straight planter box.

Cedar weathers well, so we opted to leave the wood unfinished on our planters. Although, when filled, the planters should be secure on the railing in the roughest weather, if you live in the Midwest's tornado alley, a few screws through the base ends into the railing will insure that even a storm such as whisked Dorothy away to Oz won't dislodge your planter boxes.

Stock Tip

When buying stock at a local lumberyard for our planters, we found that buying 3/4 in. thick cedar boards was an expensive way to go. A far less costly option was to buy shiplapped cedar siding, which is smooth on one side and rough-sawn on the other. At about 7/8 in. thick, after several passes through the planer our siding was smooth on both sides, and had been reduced to the required 3/4 in. thickness. A single 10 ft. long one-by-twelve siding board was all that was needed to yield stock for the two planters shown in the photos, with plenty of extra stock left over. Take care to select a board that doesn't have many knots. A knot in a strip that's only 3/4 in. square isn't recommended.

Source

The heavy duty planter trays that we used are available from United States Plastic Corp., 1390 Neubrecht Rd., Lima, OH 45801 [redacted] The tray for the straight planter box is their part no. 85014; the two trays for the corner planter box are part no. 85012 for the short tray and part no. 85013 for the longer tray.

© 2011 Woodworker's Journal

Thank you for purchasing this *Woodworker's Journal* Classic Project plan.

Woodworker's Journal Classic Projects are scans of much-loved woodworking plans from our library of back issues. Please note that specific products and sources cited in a plan when it originally appeared may no longer be available.

If you experience any problems with this plan, please contact: info@woodworkersjournal.com

or

Attn: Classic Projects
Woodworker's Journal
4365 Willow Drive
Medina, MN 55340

Thank you again for your purchase, and happy woodworking!

Matt Becker
Internet Production Coordinator

© 2011 Woodworker's Journal